# SL54F

**Reverse Voltage - 40 Volts Forward Current - 5.0 Ampere**

## LOW FORWARD VOLTAGE SCHOTTKY BARRIER DIODES

## Features

**SMAF**

RoHS COMPLIANT

- The plastic package carries Underwriters Laboratory Flammability Classification 94V-0 RoHS-compliant
- I dea for printed circuit board
- Open Junction chip
- Low reverse leakage High forward surge current
- capability High temperature soldering guaranteed
- 250℃/10 seconds at terminals

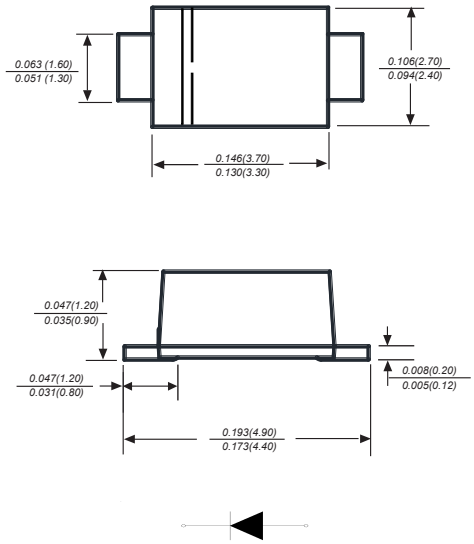


Dimensions in inches and (millimeters)

## Mechanical Data

Case : SMAF molded plastic body
Terminals : Solderable per MIL-STD-750,Method 2026
Polarity : Polarity symbol marking on body
Mounting Position : Any
Weight : 0.00095 ounce, 0.027 grams

## Maximum Ratings And Electrical Characteristics

Ratings at 25℃ ambient temperature unless otherwise specified.
Single phase half-wave 60Hz,resistive or inductive load,for capacitive load current derate by 20%.

| Parameter | SYMBOLS | SL54F | UNITS |
|---|---|---|---|
| Marking Code | | MDD SL54F | |
| Maximum repetitive peak reverse voltage | $V_{RRM}$ | 40 | V |
| Maximum RMS voltage | $V_{RMS}$ | 28 | V |
| Maximum DC blocking voltage | $V_{DC}$ | 40 | V |
| Maximum average forward rectified current at TL(see fig.1) | $I_{(AV)}$ | 5.0 | A |
| Peak forward surge current 8.3ms single half sine-wave superimposed onrated load (JEDEC Method) | $I_{FSM}$ | 150 | A |
| Maximum instantaneous forward voltage at 5.0A | $V_F$ | 0.45 | V |
| Maximum DC reverse current $T_A$=25℃<br>at rated DC blocking voltage $T_A$=125℃ | $I_R$ | 1.0<br>50 | mA |
| Typical junction capacitance (NOTE 1) | $C_J$ | 800 | pF |
| Typical thermal resistance (NOTE 2) | $R_{\theta JA}$ | 45.0 | ℃/W |
| Operating junction temperature range | $T_J$ | -55 to +150 | ℃ |
| Storage temperature range | $T_{STG}$ | -55 to +150 | ℃ |

**Note:**1.Measured at 1.0MHz and applied reverse voltage of 4.0V D.C.
2.P.C.B. mounted with 2.0x2.0"(5.0x5.0cm) copper pad areas
3.The typical data above is for reference only.

# Typical Characterisitics

Fig.1 Forward Current Derating Curve

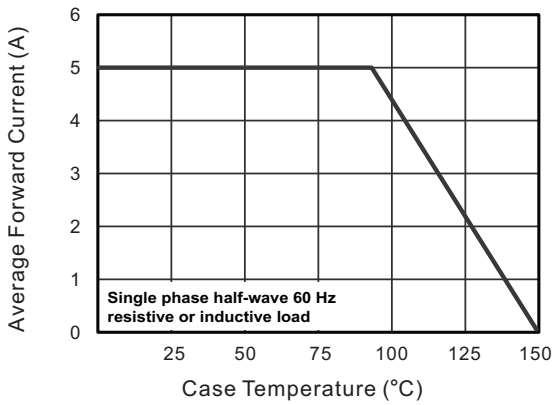


Fig.2 Typical Reverse Characteristics

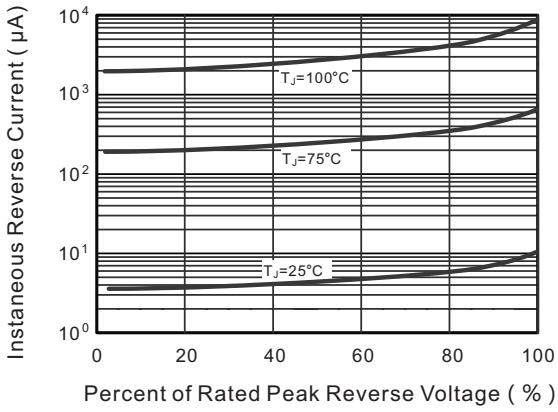


Fig.3 Typical Forward Characteristic

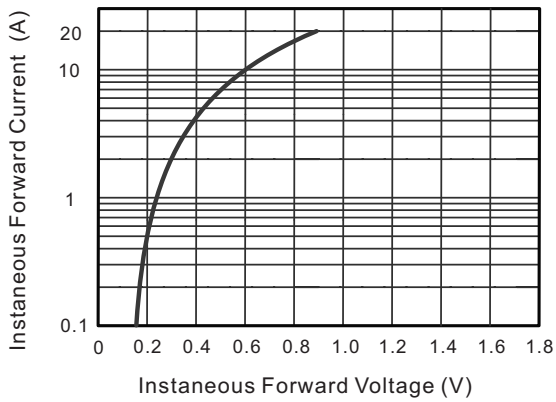


Fig.4 Typical Junction Capacitance

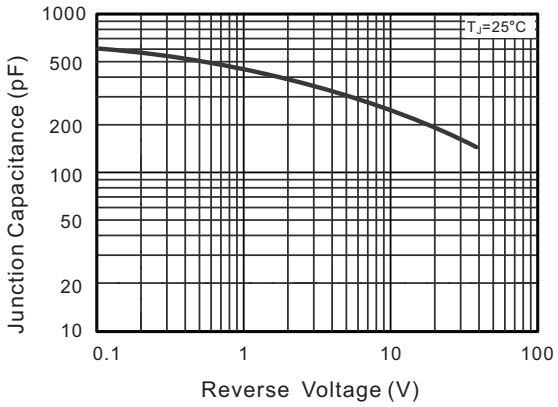


Fig.5 Maximum Non-Repetitive Peak Forward Surage Current

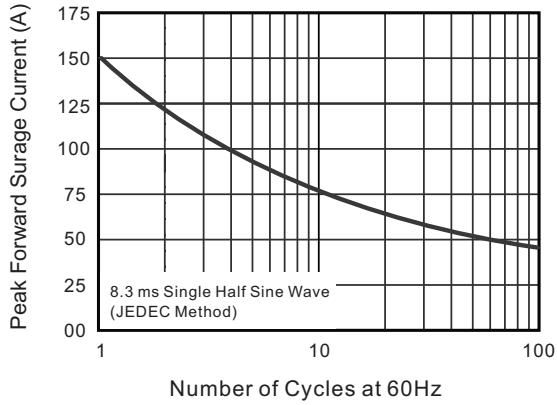


Fig.6- Typical Transient Thermal Impedance

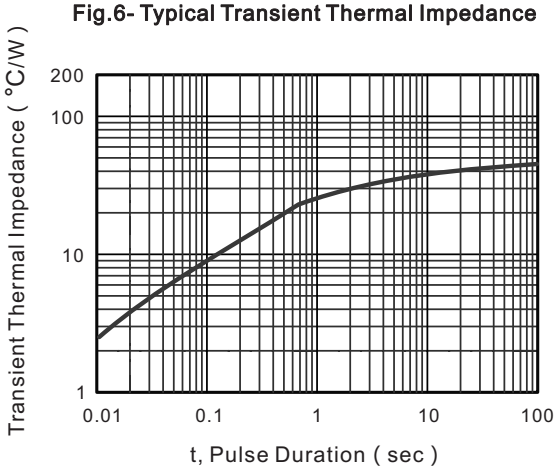


The curve above is for reference only.

## Packing information

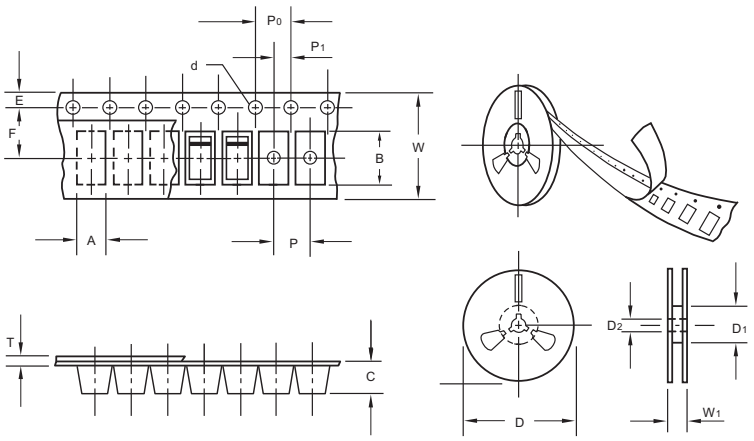


unit:mm

| Item | Symbol | Tolerance | SMAF |
|---|---|---|---|
| Carrier width | A | 0.1 | 2.80 |
| Carrier length | B | 0.1 | 4.75 |
| Carrier depth | C | 0.1 | 1.42 |
| Sprocket hole | d | 0.05 | 1.50 |
| 7" Reel outside diameter | D | 2.0 | 178.00 |
| 7" Reel inner diameter | $D_1$ | min | 54.40 |
| Feed hole diameter | $D_2$ | 0.5 | 13.00 |
| Sprocket hole position | E | 0.1 | 1.75 |
| Punch hole position | F | 0.1 | 5.05 |
| Punch hole pitch | P | 0.1 | 4.00 |
| Sprocket hole pitch | $P_0$ | 0.1 | 4.00 |
| Embossment center | $P_1$ | 0.1 | 2.00 |
| Overall tape thickness | T | 0.1 | 0.30 |
| Tape width | W | 0.3 | 8.00 |
| Reel width | $W_1$ | 1.0 | 12.30 |

**Note:Devices are packed in accor dance with EIA standar RS-481-A and specifications listed above.**

## Reel packing

| PACKAGE | REEL SIZE | REEL (pcs) | COMPONENT SPACING (m/m) | BOX (pcs) | INNER BOX (m/m) | REEL DIA, (m/m) | CARTON SIZE (m/m) | CARTON (pcs) | APPROX. GROSS WEIGHT (kg) |
|---|---|---|---|---|---|---|---|---|---|
| SMAF | 7" | 3,000 | 4.0 | 6,000 | 210*208*203 | 178 | 400*265*400 | 120,000 | 10.0 |

## Suggested Pad Layout

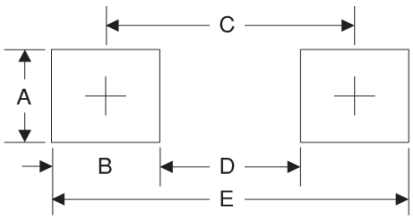


| Symbol | Unit (mm) | Unit (inch) |
|---|---|---|
| A | 1.8 | 0.071 |
| B | 1.6 | 0.063 |
| C | 3.8 | 0.150 |
| D | 2.2 | 0.087 |
| E | 5.4 | 0.213 |

## Important Notice and Disclaimer

Microdiode Electronics (Jiangsu) reserves the right to make changes to this document and its products and specifications at any time without notice. Customers should obtain and confirm the latest product information and specifications before final design,purchase or use.

Microdiode Electronics (Jiangsu) makes no warranty, representation or guarantee regarding the suitability of its products for any particular purpose, not does Microdiode Electronics (Jiangsu) assume any liability for application assistance or customer product design. Microdiode Electronics (Jiangsu) does not warrant or accept any liability with products which are purchased or used for any unintended or unauthorized application.

No license is granted by implication or otherwise under any intellectual property rights of Microdiode Electronics (Jiangsu).

Microdiode Electronics (Jiangsu) products are not authorized for use as critical components in life support devices or systems without express written approval of Microdiode Electronics (Jiangsu).